E&B Oil Development Project

City of Hermosa Beach

Planning Application

Appendix B

Plant Safety and Control Systems Report

E&B Natural Resources

www.EBNR-Hermosa.com

The E&B Oil Development Project

Plant Safety and Control Systems

E&B Natural Resources Management Corporation

Project Site: Hermosa Beach City Maintenance Yard

555 6th street

Hermosa Beach, California 90254

Prepared By:

InterAct

November 2012

4567 Telephone Road
Suite 203
Ventura, CA 93003

T: +1 805 658 5600
F: +1 805 658 5605
www.interactprojects.com

November 2nd, 2012

Attention:

Mike Finch

To:

E&B Natural Resources Management Corporation

1600 Norris Road

Bakersfield, CA 93308

Preparer:

InterAct

4567 Telephone Road, Suite 203

Ventura, CA 93003

Table of Contents

1.0 Project Overview 5

2.0 Operational Strategy 8

2.1 Overview and Philosophy 8

2.2 Design Standards and Criteria 8

2.3 Offshore Standards Enhancement 9

2.4 Hazard and Operability Study 11

2.5 Redundancy 12

2.6 Closed Loop 12

3.0 Advanced Safety Control Systems 14

3.1 Control Purpose and Strategy 14

3.2 Emergency Shutdown Systems and Operation 14

3.3 PLC Logic and Controls 16

3.4 Alarms Given to Experienced Operators 17

3.5 Routine Testing of Instrument Functionality 18

3.6 Automatic Notification System 18

3.7 Wireless Linking of Control Systems 18

4.0 Mechanical Integrity 19

4.1 *API 510/570/653* 19

4.2 Leak Prevention and Detection in Underground Pipes 20

5.0 Prevention and Mitigation for Undesirable Events 21

5.1 Process Deviations 21

5.2 Fire 22

5.3 Vapor Release 25

5.4 Tank Spills 26

5.5 Personnel Safety 26

5.6 Natural Disaster 27

6.0 Drilling Operations 28

6.1 Zonal Protection During Drilling, Production, and Injection 28

6.2 Blowout Prevention 29

6.3 Drilling Safety Systems 31

7.0 Summary 33
Appendix 34
A.1 References and Standards 34
A.2 Detailed Examples of Safety Devices 38
A.3 Glossary of Acronyms 40

1.0 Project Overview

E&B Natural Resources Management Corporation is proposing the development of an oil and gas production facility in the city of Hermosa Beach. The site for the facility is a 1.3 acre lot that is currently being used as a city maintenance yard. This lot is about 7 blocks from the ocean and near residential areas. The development and production of this facility will occur in the following four phases:

Phase 1: Site Preparation

Phase 2: Drilling and Testing

Phase 3: Final Design and Construction

Phase 4: Development and Operations

In the first phase the site will be prepared for drilling and testing. This phase will include relocating city maintenance equipment, surface grading, and construction of a well cellar. In addition to preparatory work, a sound attenuation wall will be erected, and crushed aggregate will be placed to minimize dust. Drilling and testing will begin in the second phase of this project. This phase will determine if the proposed project will be economically viable. To make this determination, three test oil wells and one water injection well will be drilled. Temporary oil, water, and gas handling equipment will be installed to process the produced fluids. At the conclusion of phase 2, if the testing yields economically favorable results, then the final design and construction will commence in phase 3. In phase 3, the final engineering design will be completed and all of the temporary equipment will be replaced with permanent equipment. In phase 4, the remaining 30 wells will be drilled and normal operations will commence. The facility is designed for 8,000 barrels of oil and 2.5 million standard cubic feet of gas per day.

This document was commissioned to affirm that this project will not only meet all applicable safety and environmental standards, but where appropriate, exceed them. Since this facility will be an onshore oil and gas production facility, it must comply with all associated onshore design standards and regulations. The purpose of this document is to provide information on additional design standards and regulations, above and beyond what is required, that may be utilized to improve the safety and environmental protection of the project.

Phase 2 and Phase 4 include the drilling of wells and subsequent production operations. The additional design standards and regulations discussed in this document apply to these phases.

Certain portions of the additional design standards and regulations discussed herein may not be applicable or appropriate for this project. Applicability and appropriateness of the additional

design standards and regulations will be determined in consultation with the California Coastal Commission, California State Lands Commission and the Division of Oil, Gas and Geothermal Resources.

In addition to onshore design standards and regulations, discussed herein are design standards and regulations that are utilized in more sensitive environments such as offshore oil and gas operations. Although this project is not offshore, it would benefit from including portions of those design standards and regulations.

Offshore drilling operations and production facilities are held to a much higher standard due to their sensitive location. To ensure that this facility follows the highest standards available, offshore standards may be used as benchmarks and implemented if it is determined additional levels of protection can be added to enhance onshore standards. The additional offshore standards to be discussed include:

- *30 CFR Part 250: Oil and Gas and Sulphur Operations in the Outer Continental Shelf*
- *American Petroleum Institute (API) standards, in particular API Recommended Practices 14C: Analysis, Design, Installation, and Testing of Basic Surface Safety Systems for Offshore Production Platforms*

In order to follow the offshore standards, the Best Available Control Technology (BACT) as well as the Best Available and Safest Technology (BAST) will be implemented. Automatic redundant systems will be in place to prevent any unplanned occurrences. There will be manual, automatic, and remote control of all critical systems. Alarms, emergency shutdowns, and automatic notification systems may also be implemented. Advanced control systems will be programmed into Programmable Logic Controllers (PLCs) that monitor and control the process based on operator defined set points.

The BACT and the BAST mentioned throughout this document have highly evolved over the last 20 years. While PLCs existed 20 years ago, they were primarily a relay center with limited process control capability. Modern PLCs have the capability to manage vast amounts of information and offer significant process control capability. The advanced capability has enabled real time monitoring of substantially more process variables. This monitoring has enabled the PLC to become more of a supervisory tool. Instead of sending alarms to the operators and relying on the operator to take the correct action, PLCs respond and control an event before it gets to an alarm stage.

Other huge advances have been in the fields of wireless technology, hazard recognition, and safety standards. Wireless technology has allowed monitoring of remote devices that previously could not be wired. It has also eliminated a cable connection that could easily be

severed. The reliability and accuracy of gas monitoring devices has increased over the years allowing for continuous monitoring, quicker hazard recognition, and faster response. If a hazardous situation is detected, an automated sequence of events is triggered. This sequence notifies the plant personnel, safety officials, and the public through a variety of different channels. This sequence would not have been possible 20 years ago. Additionally, the standards governing safety designs have been continually evolving. All *API* standards are continuously reviewed to ensure they remain current and applicable with the latest technologies.

A major focus of the control designs will be based on prevention. An investigation done after any unplanned event always yields preventative actions that should have taken place. The goal is to have these measures in place before the event occurs. Upon completion of the piping and instrumentation drawings (P&IDs), a hazard and operability study (HAZOP) will be performed to systematically analyze the process and evaluate all potential unplanned events. The HAZOP will determine what alarms, shutdowns, and notifications will be implemented.

During the construction phase, all process piping will be tested according to *ASME 31.3* to ensure there are no material or fabrication defects. This testing will reduce the chances of any release due to material flaws. In addition to material testing before the facility is in service, there will also be programs implemented to regularly inspect the equipment. The standards that will be referenced to inspect the pressure vessels, piping, and tanks are *API 510*, *API 570*, and *API 653* respectively. These industry specific standards are used to monitor the life of the material. By using these standards, the equipment can be retired or repaired before the material is weakened to an unacceptable level.

The redundant automatic safety control systems, pre-installation material checks, and routine inspections are all part of a strategy to prevent any unplanned events from happening. Even with this strategy in place, it is important to have a plan to mitigate any event that does occur. Emergency Action Plans will be in place to deal with any facility excursions. The operators will be trained to react to any situation and respond accordingly to any threat. Besides just local facility wide issues, there will also be action plans for global events. These events could include fires, spills, natural disasters, terrorist attacks, and floods.

Throughout every phase of this project, the latest technology and highest standards will be used to ensure safe and environmentally protective operations are being conducted. Systematic approaches will be taken to ensure no detail is overlooked and that there are proper controls and procedures in place for all operations. Any operation deemed critical will have redundant safety systems. Highly skilled operators with thorough knowledge of the emergency action plans will have the training to prevent or minimize any situation that arises.

2.0 Operational Strategy

2.1 Overview and Philosophy

The overall philosophy of the design strategy is to utilize the BACT and BAST to produce oil and gas in the safest, most environmentally protective way possible. The path to accomplish this is to hold the design, construction, and production phases to the highest standards available. The *American Petroleum Institute (API)* is the industry leader when it comes to standards. *API* has issued thousands of documents which have become industry standards and are referenced by many government agencies. These documents are peer reviewed and continuously updated to reflect the newest changes in safety and design. Following these standards is an effective way to ensure the design, construction, and production phases are being performed to current industry accepted standards.

This project will follow all applicable onshore safety standards as well as voluntarily utilizing more stringent standards such as those used for offshore operations. Offshore production facilities occur off the coast in the ocean over the continental shelf. These facilities occupy a smaller footprint and are in more environmentally sensitive locations compared to their onshore counterparts. Due to these limitations, the standards and regulations they must abide by are more strict than onshore. In keeping with the philosophy of utilizing the highest available standards, the offshore standards will be used whenever applicable and appropriate.

2.2 Design Standards and Criteria

API has many standards which oil and gas production facilities follow. One such standard is *API RP 51R: Environmental Protection for Onshore Oil and Gas Production Operations and Leases*. *API RP 51R* details environmental guidelines for oil and gas facilities, from construction through production, as well as how to be a "good neighbor". This Standard is of particular importance given the location of the proposed facility. Another onshore standard to be referenced is *API 74: Recommended Practice for Occupational Safety for Onshore Oil and Gas Production Operation*. This document outlines safe work practices for personnel. It is a guide to ensure that safety is a primary goal when designing the facility.

The federal offshore regulations are defined in the *Code of Federal Regulations, Part 250: Oil and Gas and Sulphur Operations in the Outer Continental Shelf*. A short list of items covered in the regulations include: Performance Standards, Inspection of Operations, Pollution Prevention and Control, Blowout Preventer (BOP) System Requirements, Drilling Requirements, and Safety and Environmental Management Systems. These regulations are typically enhanced forms of the onshore equivalents.

Aside from the federal regulations governing offshore production, applicable API offshore standards will also be used. *API 14C: Recommended Practice for Analysis, Design, Installation,*

and Testing of Basic Surface Safety Systems for Offshore Production Platforms will be used. *API 14C* illustrates how system analysis methods can be used to determine safety requirements to protect any process component. *API 14J: Recommended Practice for Design and Hazards Analysis for Offshore Production Facilities* can be used. *API 14J* has a specific hazard analysis methodology which can be applied onshore, providing a systematic and in depth approach.

During the drilling portion in phase 2 and 4, additional standards will be utilized. The governing regulations will be those enforced by the Division of Oil, Gas and Geothermal Resources (DOGGR), supplemented by *API 53: Recommended Practices for Blowout Prevention Equipment Systems for Drilling Wells*. *API 53* is a guide for both onshore and offshore systems. It covers installation and testing of blowout prevention equipment systems on land and marine drilling rigs. *API RP 49: Recommended Practice for Drilling and Well Servicing Operations Involving Hydrogen Sulfide* will be the guiding principle in protection against hydrogen sulfide gases. *API 65: Isolating Potential Flow Zones during Well Construction* will be referenced to ensure environmental protection through zonal isolation.

During the construction phase, piping systems will conform to *ASME B31.3* for process piping code, design, fabrication, and inspection. Pressure Vessels, which are capable of having an internal pressure greater than 15 psig, will be fabricated according to *ASME Section VIII – Division 1.* Low pressure tanks, which have a pressure under 15 psig, can be designed according to *API 620: Design and Construction of Large, Welded, Low-Pressure Storage Tanks.* Following these construction standards ensures that the correct materials and fabrication procedures are used. By testing the materials for thickness, defects, and fabrication flaws, the operator can eliminate problems before the equipment is put in service.

All of these standards mentioned will be discussed in greater detail in their respective sections.

2.3 Offshore Standards Enhancement

The most robust safety and control system available follows all onshore standards and also incorporates the offshore standards wherever applicable. There are several notable differences that give the offshore standards tighter control of the process than the onshore standards do. First, there is standardized training for operators which is typically conducted through a third party. *API T2*, *API T3*, and *API T6* provide guidelines for operator training. This standardized training ensures that any operator at the facility has received proper training. The *Code of Federal Regulations: Part 250*, for offshore operations, dictates that the Best Available Control Technology (BACT) as well as the Best Available and Safest Technology (BAST) be used at all times. This technology will provide for the latest in safety control systems. Regulation *30 CFR part 250* includes inspection criteria to verify conformance with the rules and guidelines listed within. Regulation *30 CFR part 250* also contains guidelines for designing, installing, and testing surface safety devices. There are two levels of protection, primary and secondary, to prevent

or minimize the effects of equipment failure. Additionally, there is a proven analysis method to determine safety requirements for process equipment, assuming worst case conditions.

In addition to what is included in *30 CFR part 250,* there are enhancements within the *API* standards. Using *API RP 14C,* there is a requirement for the development of SAFE charts. Safe charts are cause and effect charts that provide a systematic way to analyze a system. Safety flow diagrams that show equipment and safety devices are also required.

Table 2.3.1 shows a typical SAFE chart.

SAFETY ANALYSIS
FUNCTION EVALUATION CHART
E&B NATURAL RESOURCES

Rev. 9/12 **EB-HB-SC-D-0201** Page 1 of 1

Process Component			Device I.D.		Alternate Protection				Function Performed							
Identification		Service			SAC REF. Number	Alternate Device if Applicable			SHUTDOWN OR CONTROL DEVICE ID		MAIN ANNUNCIATOR PANEL (ALARM)	PRESSURE RELIEF	MINIMIZE BACKFLOW	MOTOR INTERLOCK	CLOSE SDV 10A F-1 OIL INLET	SDV 10B F-1 GAS OUTLET
MBD	F-1	1ST STAGE SEPARATOR	PSH	10							X				X	
			PSL	10							X				X	X
			PSV	6								X				
			PSV	7								X				
			LSH	10							X				X	X
			LSL	10							X				X	
			FSV	10A									X			
			FSV	10B									X			
			FSV	10C									X			

Table 2.3.1 – SAFE Chart

Another key difference in the offshore standards is shut down design. Typically with onshore facilities, “cascading” shutdowns are designed into the system. “Cascading” means that when one vessel in the process train experiences an event, the system is programmed to close off that vessel. The next vessel in line will react to that first shut down and close off, and so on. The event is propagated throughout the system until finally the actual source is shut down. The

use of cascading shutdowns is discouraged in the offshore environment. Instead, if a shutdown is initiated, the process inputs are shut off at the primary source of energy. Source isolation is the primary function with facility shutdown being the secondary function. By minimizing cascading shutdowns, the event response is much quicker when a facility shutdown is necessary.

2.4 Hazard and Operability Study

A hazard and operability study (HAZOP) is a hazard analysis method commissioned during the design phase to systematically go through all the proposed equipment and determine where enhanced safety systems should be included. The HAZOP generates a list of operational deviations, consequences, and corrective actions. After conducting the HAZOP, the results will be incorporated through *API RP 75* into an all-encompassing safety management system.

The HAZOP and corresponding hazard analysis can be done according to *API 14 J: Recommended Practice for Design and Hazards Analysis for Offshore Production Facilities*. In the HAZOP, a multi-disciplinary team works together in a systematic approach to analyze each aspect of the process design. A structured "what-if" methodology is used. A P&ID drawing set is used to perform the HAZOP. A list of guide words such as high, low, over, and under, are used in conjunction with a list of operating parameters. The parameters include pressure, temperature, flow rate, valve settings, tank fluid levels, and other operational characteristics. Once the P&IDs, guide words, and process parameters are determined, the HAZOP begins by systematically going through every process step on every page of the P&ID. An example of a process step would be a storage tank. The HAZOP team would systematically go through every combination of the guide words and process parameters and discuss what could happen. For example, the team would ask "what if there is *high pressure*?" *High* would be the guide word and *pressure* would be the process parameter. The HAZOP team, consisting of operators, engineers, and technical advisors, would go through potential outcomes in that scenario. A high pressure may lead to over pressuring the tank. To prevent or mitigate this situation, the remedy could be an alarm, a shutdown preventing flow from entering the tank, and/or a relief valve on the tank to relieve the pressure. All of the information is documented and implemented into the design. Then, the next scenario, *under pressured,* would be evaluated in a similar way. Through this systematic approach, all equipment and scenarios are accounted for. An example of a typical HAZOP matrix can be seen in Table 2.4.1

Design/Operations Parameters	Guide Words					
	No/Low	**More/High**	**Misdirected**	**Reverse**	**As Well As**	**Other Than**
Flow	No/Low Flow	More Flow	Misdirected Flow	Reverse Flow	As Well As Flow	Other Flow
Temperature	Lower Temperature	Higher Temperature				
Pressure	Lower Pressure	Higher Pressure				
Level	No/Lower Level	Higher Level				
Other/General	Composition, Maintenance, Start-up, Heat Tracing, Piping Spec's, Phase, Viscosity, Density, Reaction, Corrosion, Erosion/Fatigue, Sampling, Service Loss, Duration, Sequence, Human Factors, Safety/Health, Instrumentation, Agitation, Speed					

Table 2.4.1 – HAZOP procedure

2.5 Redundancy

A key aspect of all well engineered safety systems is redundancy. Redundancy is the duplication of critical safety components. Depending on how critical the system is, there could also be triple redundancy. Redundancy will be a common theme in the designs of the various phases. Many of the redundant design elements come directly from the standards found in *API 14C*. Other elements will come from the hazard analysis. An example would be the pressurizing of a tank. If a tank reaches a certain pressure, a *High Pressure (HP)* alarm will alert the operator to take corrective action. If the problem isn't alleviated, then a second *High High Pressure (HHP)* alarm will be activated sending another higher priority alarm to the operator. If the pressure is still not reduced, then automatic shutdowns would be implemented to prevent flow into the tank. If this still does not reduce the pressure then a mechanical device called a Pressure Safety Valve (PSV) would open up and send the built up pressure to a Vapor Recovery Unit (VRU) or enclosed ground flare. This level of redundancy is common and is a primary safety design.

2.6 Closed Loop

This facility will implement a "closed loop" strategy to minimize any atmospheric emissions. The fundamental purpose of the "closed loop" strategy is to keep produced fluids contained within the process vessels and piping. All tanks and process vessels will be connected to a VRU. Instead of venting gases directly to the atmosphere, they are vented to the VRU. The VRU separates the liquids from the gases and recycles both back into the system. The system is designed to be self-contained and not vent to atmosphere. In this scenario, it may not always be possible to send vapors to the VRU system. In an emergency situation, the gas is sent to an enclosed ground flare. Flaring is the controlled burning of a hydrocarbon. In an emergency,

gaseous hydrocarbons are sent to the flare for combustion. Sending gases to the flare prevents them from being sent into the atmosphere. Through the combustion process, the gases are converted to predominantly water (H_20) and carbon dioxide (CO_2).

3.0 Advanced Safety Control Systems

3.1 Control Purpose and Strategy

Throughout every phase of this project, the BACT and BAST will be implemented. This approach complies with the offshore regulation, *30 CFR 250*. The purposes of safety controls are to minimize the chances of an undesirable event. An undesirable event is defined as "an adverse occurrence in a process component that poses a threat to safety". Potential undesirable events developed in the HAZOP analysis are addressed in the control strategy. For every potential undesirable event, the control strategy will be designed by evaluating the cause, determining the effect, and defining the detectable abnormal condition. Then, a primary and secondary protection will be designed to prevent or react to the undesirable event.

3.2 Emergency Shutdown Systems and Operation

Emergency Shutdown (ESD) systems are manual control stations located throughout the facility. Initiation of one of these shutdowns will initiate shutdown of all wells and other process stations. This shutdown will terminate all current facility production and shut off flow from the producing wells. The ESD provides a means for personnel to manually initiate shutdowns as soon as an abnormal condition is observed. Under certain conditions, the ESD may be initiated automatically. This ESD process stems from *API 14C* as well as *30 CFR 250*. These safety systems are only required for offshore facilities, but can be implemented in the proposed onshore facility to provide an enhanced safety environment. Being able to isolate the facility once an abnormal condition is detected can save valuable time and prevent undesirable outcomes.

Shutdown Valves (SDVs) are types of plug, gate, ball or tapered plug valves with spring closing actuators. These valves are designed so they "Fail" in the "Closed" position and are actuated by the ESD system for facility shutdown, or by process component safety devices for localized shutdown. The ESD valves are used to isolate the input energy source on pipelines, fuel supply lines, suction lines and many other places where design and/or regulation require a shutdown in the event of an emergency or abnormal operating condition.

Wellhead Surface Safety Valves (SSVs) and Surface Controlled Sub-Surface Safety Valves (SCSSVs) typically use hydraulic actuators that fail-safe closed. An independent hydraulic control panel provides the pressure to hold the safety valves open and monitors the flowline for high or low pressure events. If an undesirable event occurs, the hydraulic panel blocks and bleeds the control signal to the SSV and SCSSV, allowing them to return to their fail-safe closed position. Figure 3.2.1 is an example of a typical wellhead safety control system as defined by *API RP 14B* and *14H*.

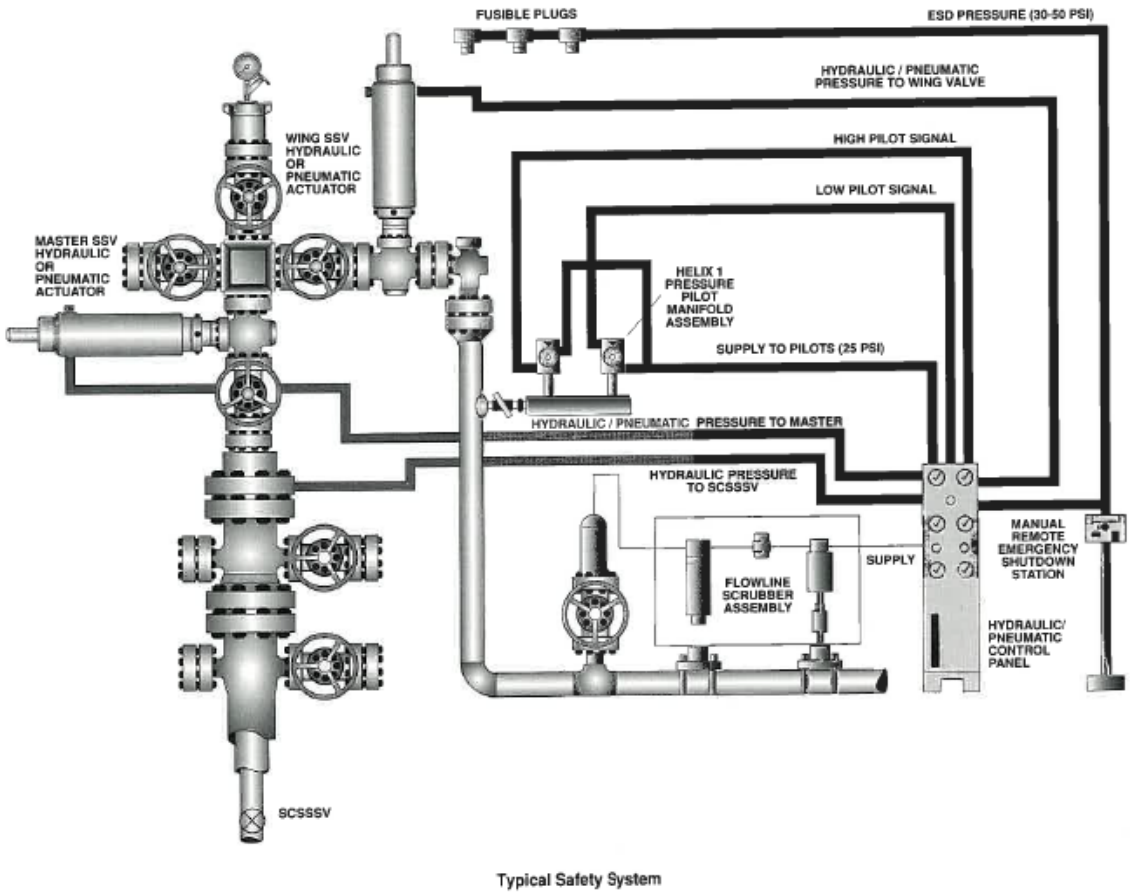

Figure 3.2.1 – Typical Wellhead Safety System, Courtesy of Baker Oil Tools

Testing of the SSVs and SCSSVs will follow the procedures defined in *API RP 14H*, which requires an SSV pressure holding test at least every 6 months. The SSVs must be pressurized from the upstream side of the valve, with an open valve downstream to check for leakage. *API RP 14 B* recommends time delays between the closure of the SSVs and SCSSV in a given well to avoid damage to the sub surface valve under high flow conditions. Testing on a typical wellhead safety control system has yielded the closure rates after detection of an undesirable event shown in Table 3.2.1.

Safety Device	**Closure Time**
Wing SSV	3-4 seconds
Master SSV	20 seconds
SCSSV	45 seconds

Table 3.2.1 – Safety Device Closure Times

Process Shutdown Valves (SDVs) typically use pneumatic actuators that “fail-safe closed” when the air is released from the piston side of the actuator. The speed of operation will be determined by a number of factors including the pressure source, supply line size, control valve orifice, the torque requirement of the valve, and the size of the actuator. Due to the interaction of these variables, it is difficult to specify a “normal” operating time. Faster operation may be obtained by using larger air lines, larger control valves, higher supply pressure and/or quick exhaust valves. Rapid closing/opening can create surges in the pipeline, so surge analysis should be performed for the associated pipe system. As a standard practice, speed of closure is considered as 1 second per inch of valve nominal bore size.

Figure 3.2.1 is a typical wellhead for naturally producing oil and gas well. A naturally producing well produces fluid to the surface due to an increased reservoir pressure. The increased reservoir pressure is caused by different natural drive mechanisms. The equipment on the wellhead is designed to safely control this flow of fluid. If, after completing the well, the reservoir pressure is determined to be too low to cause fluid flow to the surface, then an artificial lift pump will replace some of the wellhead equipment. In this scenario, the pump is producing fluids instead of the reservoir drive, so all that is needed to “kill” the fluid flow is to shut off the pump.

3.3 PLC Logic and Controls

A PLC is a programmable logic controller that can regulate the process. It is the relay between the operators and the process. The PLC can send signals to the operators such as process parameters and alarms. These parameters will be graphically viewed by the operators through a Human Machine Interface (HMI) screen. The operators can in turn send signals through the HMI which goes through the PLC to the process to adjust operating parameters. This adjustment might include opening or closing a valve, which in turns increases or decreases flow.

During the design, typical operating parameters for each piece of equipment will be determined. These parameters are called Set Points (SPs) and it is where the piece of equipment should typically operate. The actual value is called the Process Variable (PV) and it is where the equipment is actually operating. The signal sent through the PLC to the process is called the Controller Output (OP). The OP can control items like the operation of a valve. A typical control scheme regulated by the PLC would be the level in a tank. Assume that during the design and hazard analysis phase it was determined that a 50% level was the best place to operate a tank. This level would then correspond to the SP of 50%. The fluid flow into the tank can fluctuate depending on a number of factors including production. If the flow increases then the PV, the actual tank volume, might increase to 51%. The PLC will recognize this PV and send

an OP signal to the input control valve to close the valve. This OP will restrict flow and bring the PV back down to 50%. This automated process limits the effects of human error.

3.4 Alarms Given to Experienced Operators

Consider again the example with the tank at an SP of 50%. The 50% operating level was determined as a safe operating point for this particular piece of equipment. During the safety analysis, other safety parameters were determined as well. One example would be a "High Level Alarm" and the specific alarm level would be determined through hazard analysis. Assume this alarm is set at 70%. If the tank volume were continually increasing then a signal would be sent through the PLC to the operators. This signal would give them an indication that something is happening in the process that needs to be investigated. The cause could be a stuck valve and the experienced and highly trained operators would investigate the alarm and rectify the situation. The alarm would be the primary safety device. If the operator could not control the level then a secondary safety device would be a mechanical Pressure Safety Valve (PSV) that would send the excess liquid to a safe area in the process. Also, in any circumstance that the operator feels warranted, he can immediately operate the ESD and halt production until the cause is further investigated.

The operators will receive facility specific training. The training will include familiarization with consequences of deviations, possible causes, and corrective actions. These items will be documented and always available to the operators. Using the tank again for an example, if the alarm was sent to the operator that the tank had a "high level" he could reference these documents to see what the possible causes would be and what corrective actions could be taken. For the consequences of deviation, it would list what would happen if the tank were to continually rise. The high level could affect upstream operation or it could eventually trigger a mechanical PSV to operate. Under the causes section it would state that a possible cause would be a stuck inlet or outlet valve. In the corrective action section it would list putting the valves in manual operation and opening or closing them. The operator, being fully trained and tested, would already be aware of these consequences and corrective actions, but would have a reference readily available.

The operators can be trained according to *API T3: Recommended Practice for Training and Qualification of Personnel in Well Control Equipment and Techniques for Drilling on Offshore Locations. API T3* certifies the operators to be able to operate, test, troubleshoot and maintain the safety devices and controls. This certification is a requirement for all offshore operators. Other training could be conducted through *API T2: Qualification Programs for Offshore Production Personnel who work with anti-pollution Safety Devices*, as well as *API T6: Training and Qualification of Personnel in Well Control Equipment and Techniques for Completion and Workover Operations on Offshore Locations.*

3.5 Routine Testing of Instrument Functionality

All safety instruments will be inspected and tested prior to installation as well as on a routine basis. The testing frequency for electronic pressure transmitters and level sensors will be performed quarterly, while mechanical instruments will be tested monthly. Regulation *30 CFR 250* allows the reduction in testing frequency for electronic instruments based on the increased reliability and repeatability of electronic instruments. ESDs and other critical equipment will be tested on a higher frequency basis. Safety Analysis Function Evaluation (SAFE) charts provide a checklist for the design and installation verification of instrumentation. The SAFE chart is a way to determine that a safety device is operable, properly calibrated, and accomplishes the design control function. When all of this information is confirmed, then the installation is verified.

Testing schedules will be determined according to best practices. All safety equipment will be tested at least annually, but could also be tested more frequently depending on the criticality of the system. Regulation *30 CFR Part 250* has specific testing frequencies for individual pieces of equipment. Instrumentation that does not pass the tests will be taken out of service along with its associated equipment until it can be repaired or a replacement can be made.

3.6 Automatic Notification System

An Automatic Notification System will be reviewed for possible implementation. The notification system monitors the process for abnormal conditions. If a situation arises that could affect neighboring areas, then the notification system will be activated and alerts will be sent out to appropriate stakeholders. Notifications can be sent through e-mail, automated calls, text messages, and other means. One purpose of automatic notification is in an unplanned event, an operator may be busy trying to mitigate the situation so the automatic notifications will ensure that appropriate agencies are notified promptly.

3.7 Wireless Linking of Control Systems

Wireless Control Systems (WCSs) are cutting edge control strategies that eliminate the need for devices to be hardwired. From a safety standpoint, a WCS can eliminate failure of the connecting wire. In the case of a fire or other unplanned event, it is possible to sever the connecting wires between control systems, which would render the devices useless. Having a wireless control system would ensure the instrumentation was not relying on any hard wired connection.

4.0 Mechanical Integrity

4.1 *API 510/570/653*

One key way to prevent spills is to have a strong mechanical integrity program in place. Mechanical integrity programs provide a systematic approach to monitoring the life of pressure vessels, tanks, and piping. All equipment degrades over time. If not monitored, then this degradation can lead to a material thickness reduction to a point not suitable for service. This is a critical point where leaks and spills can happen. By monitoring the material reduction an expected life of service can be given and the piece of equipment can be retired before the critical point is reached.

The mechanical integrity program for pressure vessels will be modeled according to *API 510: Pressure Vessel Inspection Code - Maintenance Inspection, Rating, Repair, and Alteration*. *API 510* specifically addresses the maintenance inspection, repair, alteration, and rerating procedures for pressure vessels. *API 510* applies to vessels that have already been placed in service and have been inspected by an authorized party. During the inspection, the pressure vessel is visually inspected as well as mechanically inspected. Thickness readings in different sections are taken and compared to previous readings. Vessel pressure tests can also be performed if the inspector believes it is warranted. All the gathered information is then evaluated and the fitness-for-service is determined. The vessel can be deemed fit-for-service if the process has not adversely affected the equipment. The vessel can be de-rated, meaning the vessel can no longer accommodate the previous Maximum Allowable Working Pressure (MAWP) and the new MAWP would be lowered. If there is a defect or an area of concern, then the section can also be repaired and the vessel re-rated.

The mechanical integrity program for the installed piping will be modeled according to *API 570: Inspection, Repair, Alteration, and Rerating of In-Service Piping Systems*. *API 570* covers inspection, repair, alteration, and rerating procedures for metallic piping systems that have already been in service. The inspections can include thickness testing and monitoring, pressure testing, material verification, inspection of flanged joints, and inspection of welds. After the information is gathered, then an assessment of the piping system is given. This assessment can include a piping stress analysis, retirement thickness determination, and MAWP determination. The frequency of inspections depends on the degradation of the piping. Sections that appear to be losing material at a faster rate will have an increased frequency of inspection.

The mechanical integrity program for tanks will be modeled according to *API 653*: *Tank Inspection, Repair, Alteration, and Reconstruction*. *API 653* covers steel storage tanks built to *API 650* standards. It covers tanks that have already been put in service and addresses inspection, repair, alteration, relocation, and reconstruction. During the inspection,

components to be reviewed will be the tank roof, tank shell, tank bottom, and tank foundations. Visual inspections as well as thickness measurements will be taken and compared to previous findings. If the inspector determines it is needed, then hydrostatic tests, Non-Destructive Examinations (NDE's), and leak tests will be performed. The results of the inspection will determine to what extent, if any, the tank should be repaired.

4.2 Leak Prevention and Detection in Underground Pipes

In the underground pipeline there will be multiple precautions taken to prevent and detect leaks. The construction of the pipeline will use *ASME B31.4: Pipeline Transportation Systems for Liquid Hydrocarbons and Other Liquid* as a reference for design. This standard specifically addresses the requirements for the design, materials, construction, and assembly of pipelines carrying liquid hydrocarbons. After construction, the aboveground section can be evaluated according to *API 570*. If the surface portion of the pipeline reveals defects, then this will be translated to issues underground as well and appropriate actions up to, and including, replacing the pipeline will be taken. A pair of mass flow meters will be at the input and output of the pipeline. These high accuracy flow measurement devices can tell if there is a discrepancy as to the fluid/gas volume that is going in one end and out the other end. This would be an indication of a leak and is a common detection strategy used on offshore platforms. The pipeline will also be subject to a periodic hydrotest to ensure there will be no leaks, or inspected via an In Line Inspection Tool (Smart Pig). A smart pig is an electronic tool that reads the pipeline thickness as it moves through the pipe. The data is downloaded and reviewed to determine that the wall thickness of the pipe is still suitable for service. This information along with iron counts, corrosion coupons, cathodic protection and other data are integrated to assess the integrity of the pipeline. The pipelines are also connected to the safety system and have sophisticated shutdowns in the event of a leak.

5.0 Prevention and Mitigation for Undesirable Events

Prevention and Mitigation techniques for many undesirable events are outlined in *API 14C: Recommended Practice for Analysis, Design, Installation, and Testing of Basic Surface Safety Systems for Offshore Production Platforms*, *API 14J: Recommended Practice for Design and Hazards Analysis for Offshore Production Facilities*, and *API 51R: Environmental Protection for Onshore Oil and Gas Production Operations and Leases*. Both onshore and offshore oil and gas standards are referenced. The offshore standards are typically stricter, for reasons already described, and will be used to supplement the onshore standards.

For any undesirable event there is always prevention potential as well as ways to mitigate the event once it has occurred. Preventative measures are referred to as the primary protection. Mitigation measures would be the secondary protection.

5.1 Process Deviations

Process deviations occur when a process parameter is outside of the normal operating range. Process deviations can happen through a multitude of reasons. The most important way to deal with process deviations is to deal with them before they become an issue. The first step is proper identification of what the process deviations are. This is handled during the hazard analysis section and incorporated into the facility safety documentation. The prevention of any process deviation from becoming an undesirable event would be the primary protection. The primary protection would be alarms, operator intervention, and shutdowns. Depending on the deviation there could be multiple forms of primary protection.

If the primary protection device does not adequately quell the deviation, then the secondary or mitigating device would kick in. This would include Pressure Safety Valves (PSVs), venting to a flare, vacuum breakers, and ESDs. The secondary device is typically independent of the primary device. In this sense a device failure would not be propagated to a system failure. The handling of process deviations would be clearly outlined and readily available to the operators. The operators would be trained to handle these scenarios.

The following table illustrates eight undesirable events and the primary and secondary protection for each event as defined in *API RP 14C*.

UNDESIRABLE	PRIMARY PROTECTION	SECONDARY PROTECTION
Overpressure	PSH (Pressure Safety High) or Vent on Atmospheric Tank	PSV (Pressure Safety Valve)
Leak	PSL (Pressure Safety Low) and FSV (Flow Safety Valve)	LSH (Level Safety High) at Sump
Overflow	LSH	LSH and PSH on downstream component
Gas Blowby	LSL (Level Safety Low)	PSH and PSV or vents on downstream component
Under pressure	Gas Makeup System (PSL) or Vent on Atmospheric Vessel	PSL (LSH) or 2nd vent or PSV on Atmospheric Vessel
Excess Temperature	TSH (Temperature Safety High) Media, LSL, FSL, TSH Stack	TSH (Stack or Media), ESS (Emergency Support System)
Direct Ignition Source	Flame Arrestor, Stack Arrestor, TSH (Media and Stack) or PSL (Air Intake)	ESS (Fire Loop) Motor Starter Interlock
Excess Fuel in Firing Chamber	BSL (Burner Safety Low) TSL (Temperature Safety Low)	PSH (Fuel), PSL or FSL (Air) Motor Starter Interlock

Table 5.1.1 – Undesirable Event Protection

5.2 Fire

Fire is one of the biggest threats to any facility and the prevention of which is a primary objective in the design stages. The hazard analysis will outline areas of concern and proper protective devices. *The California Fire Code* (*CFC*) are the established regulations that will be followed. As an added measure of safety, the *National Fire Protection Association* (*NFPA*) standards will be utilized. The *NFPA* codes are industry best practice standards for ensuring that fire protection and safety systems are installed and maintained to protect the site and surrounding area.

The causes of a fire are numerous, but every fire has the same ingredients. The three ingredients necessary for the combustion process to take place are: oxygen, a fuel source, and heat. If these three components are in the proper proportions then the result is a fire. When analyzing a system for fire prevention the goal is to eliminate two of these three items. Eliminating one component would be sufficient, but for an added safety factor two of the three are eliminated. An example of this would be to consider a hydrocarbon storage tank. The fuel source cannot be eliminated, but the oxygen and the heat can be eliminated. Gas blanketing

will be used to eliminate the oxygen. By applying a blanket gas (produced gas from the well) in the tank under a positive pressure, it ensures that atmospheric oxygen cannot enter the tank through any openings and that the tank's void space is oxygen free. The tank's vent system will contain a flame arrestor that prevents an outside flame source from propagating back into the tank.

The following national consensus standards related to worker health and safety, fire protection services, and emergency medical services are applicable to the construction and ongoing operation of the facility.

LORS	**Applicability**
Uniform Fire Code, Article 80	Addresses the prevention, control, and mitigation of dangerous conditions related to storage, dispensing, use and handling of hazardous materials and information need by emergency response personnel
National Fire Protection Association (NFPA) 10, Standard for Portable Fire Extinguishers	Requirements for selection, placement, inspection, maintenance, and employee training for portable fire extinguishers
NFPA 11, Standard for Low-Expansion Foam and Combined Agent Systems	Requirements for installation, and use of low-expansion foam and combined –agent systems
NFPA 11A, Standard for Medium- and High-Expansion Foam Systems	Requirements for installation and use of medium- and high-expansion foam systems
NFPA 12, Standard on Carbon Dioxide Extinguishing Systems	Requirements for installation and use of carbon dioxide extinguishing systems
NFPA 13, Standard for Installation of Sprinkler Systems	Guidelines for selection and installation of fire sprinkler systems
NFPA 14, Standard for the Installation of Standpipe and Hose Systems	Guidelines for selection and installation of standpipe and hose systems
NFPA 15, Standard for Water Spray Fixed Systems	Guidelines for selection and installation of water fixed spray systems
NFPA 17, Standard for Dry Chemical Extinguishing Systems	Guidance for selection and use of dry chemical extinguishing systems
NFPA 25, Standard for the Inspection, Testing, and Maintenance of Water-Based Fire Protection Systems	Requirements for the periodic inspection, testing, and maintenance of water-based fire protection systems, including land-based and marine applications
NFPA 30, Flammable and Combustible Liquid Code	Requirements for storage and use of flammable and combustible liquids
NFPA 54, National Fuel Gas Code	Fire protection requirements for use of fuel gases
NFPA 68, Guide for Explosion Venting	Guidance in design of facilities for explosion venting
NFPA 70, National Electric Code	Guidance on safe selection and design, installation, maintenance, and construction of electrical systems
NFPA 70B, Recommended Practice for Electrical Equipment Maintenance	Guidance on electrical equipment maintenance
NFPA 70E, Standard for Electrical Safety	Employee safety requirements for working with

LORS	Applicability
Requirements for Employee Workplaces	electrical equipment
NFPA 72, Standard for the Installation, Maintenance and Use of Local Protective Signaling Systems for Guard's Tour, Fire Alarm and Supervisory Service	Requirements for installation, maintenance, and use of local protective signaling systems
NFPA 75, Standard for the Protection of Electronic Computer/Data Processing Equipment	Requirements for fire protection systems used to protect computer systems
NFPA 80, Standard for Fire Doors and Windows	Requirements for fire doors and windows
NFPA 291, Recommended Practice for Fire Flow Testing and Marking of Hydrants	Guidelines for testing and marking of fire hydrants

Table 5.2.1 – National Consensus Standards

The following table illustrates the classification of fire detectors, the type of detectors and the operating principles used in fire detection systems at oil processing facilities.

DETECTOR CLASSIFICATION	TYPE OF DETECTOR	OPERATING PRINCIPLE
Flame Detectors	Infrared Detectors	Responds to radiant energy above 7700 angstroms
	Ultraviolet Flame Detectors	Responds to radiant energy below 4000 angstroms
Heat Detectors	Fusible Plugs	Melts at predetermined temperature
	Heat or Thermistor Sensors	Detects high temperature along a length of tubing
	Rate of Rise Detectors	Detects rapid temperature rise
Products of Combustion Detectors	Ionization Detector	Combustion products activate ionization chamber
	Resistance Bridge Detector	Combustion products upset the balance of a grid-bridge circuit
Smoke Detectors	Projected Beam	Smoke obscures the beam of light directed at a photoelectric cell
	Refraction Type	Beam of light is reflected from smoke particles into a photoelectric cell

Table 5.2.2 – Detector Classification

Aside from fire prevention, there is also mitigation strategies that will be covered in the Emergency Action Plan (EAP). The EAP is a document that contains procedures to be followed in the event of an emergency. Some of the items covered in the EAP include: emergency reporting procedures, evacuation routes, rescue procedures, and critical shutdown procedures. The EAP will be readily available to all personnel. The EAP will describe the mitigation strategies in much more detail than what is included here. Some of the mitigation strategies will be implemented in the design stages. The mitigation strategies will include tank location, fireproofing, pressure relief, flare systems, drainage, containment, electrical area classification, water suppression, and foam suppression. The EAP will also define the operator's role in a fire as well as the role of the local fire agencies. Evacuation and notification procedures will also be included in the EAP.

The *CFC* regulations will be followed in all project stages. The *CFC* has identified hazardous fire scenarios and established regulations to prevent these scenarios from occurring. Flammable liquids and proper storage is clearly defined within the *CFC* text. Other notable criteria include proper tank spacing, combustible liquid classifications, and dealing with hazardous materials. The *CFC* will also serve as a reference to the EAP. Important *CFC* chapters relating to the EAP include emergency planning, means of egress, and fire service features.

The *NFPA* standards will be used in conjunction with the *CFC* regulations when applicable. *NFPA 30: Flammable and Combustible Liquids Code*, deals with handling and storage of combustible liquids. Specifically, *NFPA 30* will be utilized as an aid in the design for tank construction and containment.

Every piece of equipment will undergo a hazard analysis in the HAZOP section which will determine exactly what safety and control instrumentation will be included. *API 14C* will be referenced as it provides safety design details for typical safety equipment.

5.3 Vapor Release

Vapor releases would be unplanned events and can be hazardous because of the health risks they pose, as well as through risk of combustion. In dealing with the risks of combustion, one preventative measure will be to have an electrical classification for all areas of the facility. Areas can be classified according to *API 500: Recommended Practice for Classification of Locations for Electrical Installations at Petroleum Facilities Classified as Class I, Division 1 and Division 2*. The locations are classified based on the possibility that flammable gases or vapors may be present if an unplanned event occurs. Possible sources that are taken into account are vents, flanges, control valves, drains, pumps, compressor seals, fittings and floating roof seals. An example of a classification is "Class I, Division I." These locations are classified if ignitable concentrations of flammable gases or vapors exist either under normal operating conditions, frequently due to repair, or faulty operation can release vapor and cause simultaneous failure

of electrical equipment. In these locations electrical equipment must be properly rated as Class I, Division I as to not produce a spark. The areas can be classified according to *API 500* and verified in the hazard analysis. All electrical equipment installed will conform to the proper area classification.

In addition to area classification, a facility gas detection system will be implemented. The gas detection system is of primary importance when dealing with Hydrogen Sulfide. Hydrogen Sulfide can be present during the drilling, testing, and production phases. A monitoring program will be put in place to identify the presence of hydrogen sulfide. *API 55: Recommended Practices for Oil and Gas Producing and Gas Processing Plant Operations Involving Hydrogen Sulfide* and *API 49: Recommended Practice for Drilling and Well Servicing Operations Involving Hydrogen Sulfide* will be the standards to which the gas detection system will be based, designed, and operated. Gas detection systems will be provided in areas where adequate ventilation cannot be achieved and in areas where personnel are frequently in attendance. A hazard analysis will be completed to determine the exact location of gas analyzers. Depending on the concentrations detected, automatic notifications can also be sent out to the appropriate agencies.

The implemented mechanical integrity program will also be a key prevention strategy in reducing the possibility of a vapor release. By monitoring the life of the process vessels, they can be taken out of service or repaired before a leak can occur.

5.4 Tank Spills

As mentioned in the previous section the mechanical integrity program will be a big part of the spill prevention plan. Routine testing will be done in accordance with *API 653: Tank Inspection, Repair, Alteration, and Reconstruction*. Through routine testing, problems are identified before they reach a critical level.

In addition to the mechanical integrity programs, all tanks will have containment equal or greater in capacity to 110% of the largest single tank volume. This containment volume will provide capacity for the worst case scenario spills as laid out in *NFPA 30*. An enclosed storage facility for chemical additives will be constructed for containment. High tank and sump level alarms will be installed to prevent an overflow scenario. Additional safety related equipment will be designed based on applicable standards and regulations.

5.5 Personnel Safety

The safety of the personnel and the public is of the utmost priority during all phases of this project. Personnel Safety will be covered by specific Health Safety and Environmental (HSE) policies in part defined by *API 74: Recommended Practice for Occupational Safety for Onshore Oil and Gas Production Operation*. Included in the policies will be safety practices, hazard

communication, personal protective equipment (PPE), fall protection, housekeeping, machinery and tools, and welding and cutting equipment. Specific policies will be in place regarding contractors and training required to enter the facility. Every person at the facility will follow safe work practices. These practices will include: load lifting, confined spaces, lockout/tagout, hot work, welding, flame cutting, and work in proximity to energized power sources.

During the design phases items related to personnel safety will be included in the analysis. Emergency eye wash and shower stations will be available wherever hazardous materials are located. All hazardous materials will have associated Material Safety Data Sheets (MSDS) easily accessible. Other items that will be included in the design analysis will be critical equipment, fire prevention, fire protection, grounding and bonding, and flammable liquids.

All operators will be trained according to the applicable *30 CFR 250* requirements as well as *API* training procedures mentioned previously. Operators will be trained on how to work safely in accordance with their duties and responsibilities. Operators will be educated as to the safety and health hazards associated with the chemicals and processes they work with.

5.6 Natural Disaster

In the event of a natural disaster the EAP will be put into effect. Depending on the severity of the event the ESD could be automatically or manually activated to shut down the facility. Facility wide alarms and evacuations could also be possible.

6.0 Drilling Operations

6.1 Zonal Protection During Drilling, Production, and Injection

In phase 2 of this project, drilling operations will begin. One of the key environmental considerations will be the isolation of the various underground zones, including the freshwater zone. The Division of Oil, Gas and Geothermal Resources (DOGGR) has strict regulations governing this isolation. The specific guidelines have largely been adopted from *API 65: Isolating Potential Flow Zones During Well Construction*. These guidelines and standards will be referenced in order to ensure the fresh water zone is protected by means of physical barrier elements.

During the drilling operations, a high density circulation fluid called the "drilling mud" is pumped into the wellbore. This "drilling mud" circulates out cuttings created by the drilling operation, cools the drill bit and, most importantly, provides a hydrostatic barrier preventing reservoir fluids from entering the wellbore. The "drilling mud's" high density imposes a hydrostatic pressure which exceeds the pore pressure in the reservoir. Since the pressure in the wellbore is higher than the pressure in the reservoir, fluids cannot flow into the wellbore. This higher pressure prevents zonal communication by eliminating the wellbore as a conductive pathway. The fluid level is monitored at the surface.

After the drilling operations are completed, steel casing is inserted into the wellbore to provide structural integrity, as well as a mechanical seal, to isolate the underground zones. The casing is cemented in place by pumping cement between the hole and the outside of the casing. The casing is impermeable as it prevents fluid flow from the reservoir into the wellbore and vice versa. Another scenario, to be considered, is the injection wells. During the production phase, a significant amount of water is produced with the oil and gas. This produced water is then pumped back into the reservoir through injection wells. To safeguard against any produced water from entering unintended zones, casing and cementing practices mentioned previously will also be used. The injection standards set forth by DOGGR's *Underground Injection Control* (*UIC*) programs will be followed as well as the applicable articles in, *Title 14: California Code of Regulations*.

In the following example, it can be shown how the drilling mud, cement, and casing prevent zonal communication.

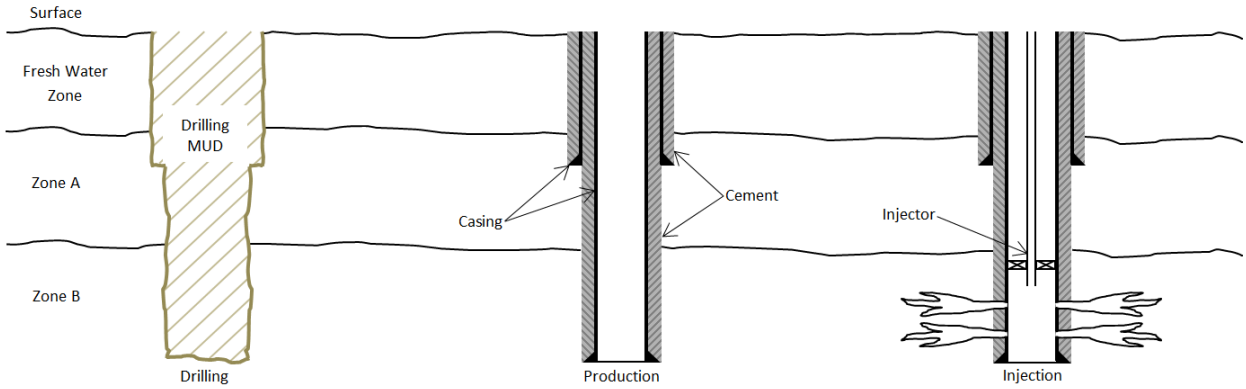

Image 6.1.1 – Zonal Isolation

6.2 Blowout Prevention

A blowout is defined as, "an uncontrolled flow of well fluids and/or formation fluids from the wellbore or into lower pressured subsurface zones (underground blowout)." The cause of a blowout is due to high underground pressure. It is possible that reservoir pressure at the proposed well depths could potentially have pressures capable of causing a blow-out. All necessary equipment and practices will be in place to deal with such a scenario.

As described in previous sections, the "drilling mud" is one form of blowout prevention. The mud weight is designed to exceed the down-hole reservoir pressure. The excess pressure keeps formation fluids from entering the wellbore. Should the balance of the fluids be off and the reservoir pressure overcomes the mud weight, this will be registered at the surface. This registered pressure spike is known as a "kick" and it will be detected by an increase in mud level at the surface. An alarm will be sent to the drilling operator and immediate action would be taken, including shutting in the well.

If a "kick" is registered during drilling, then the Blow Out Preventer (BOP) can be activated. The purpose of a blowout preventer is to confine fluid to the wellbore and cutoff the fluid path to the surface. The BOP is composed of a stack of redundant safety components to deal with all blowout scenarios while drilling. Annular preventers are the uppermost safety component and are designed to fill the annular space in a wellbore with a packing element. Pipe rams can be activated to close around drill pipe to prevent fluid flow through the annulus. Blind rams will be used if there is no drill pipe or tubing in the hole. Shear rams can be installed and can shear through any drill pipe or tubing and seal off the well. The BOP is designed for high erratic pressures under the worst scenarios possible. The design of the BOP will be based off *API 53: Recommended Practices for Blowout Prevention Equipment Systems for Drilling Wells*.

The BOP stack components are selected based upon the well classification. Depending on the area sensitivity and the critical nature of the reservoir, different classes are selected. The

classifications range from the least critical, Class I, to the most critical, Class V. An application for a drilling permit will need to be approved by DOGGR before any drilling is conducted. DOGGR will carefully review this application and select the appropriate BOP class. The BOP stack components and configuration will then be designed on the basis of DOGGR's recommendation and *API 53*. A typical BOP classification for this type of project would be a Class III or possibly even a Class IV. A Class III BOP configuration requires an annular preventer, blind ram, and pipe ram. A Class IV BOP configuration requires an annular preventer, blind ram, and two pipe rams. Class III and Class IV do not require a shear ram, but it will be included as an enhanced safety measure. A Blind Shear Ram is an improvement over the blind ram as it can be activated even if drill pipe or tubing is in the wellbore. When the Blind Shear Ram is activated with drill pipe in the wellbore, the drill pipe is sheared and there is a complete shut off of fluid flow to the surface. When there is no drill pipe in the wellbore the Blind Shear Ram acts as a blind ram creating a complete seal to eliminate fluid flow. Blind Shear Rams are common in the offshore environment and will be utilized in this project. An example of what the BOP stack could look like is show in image 6.2.1.

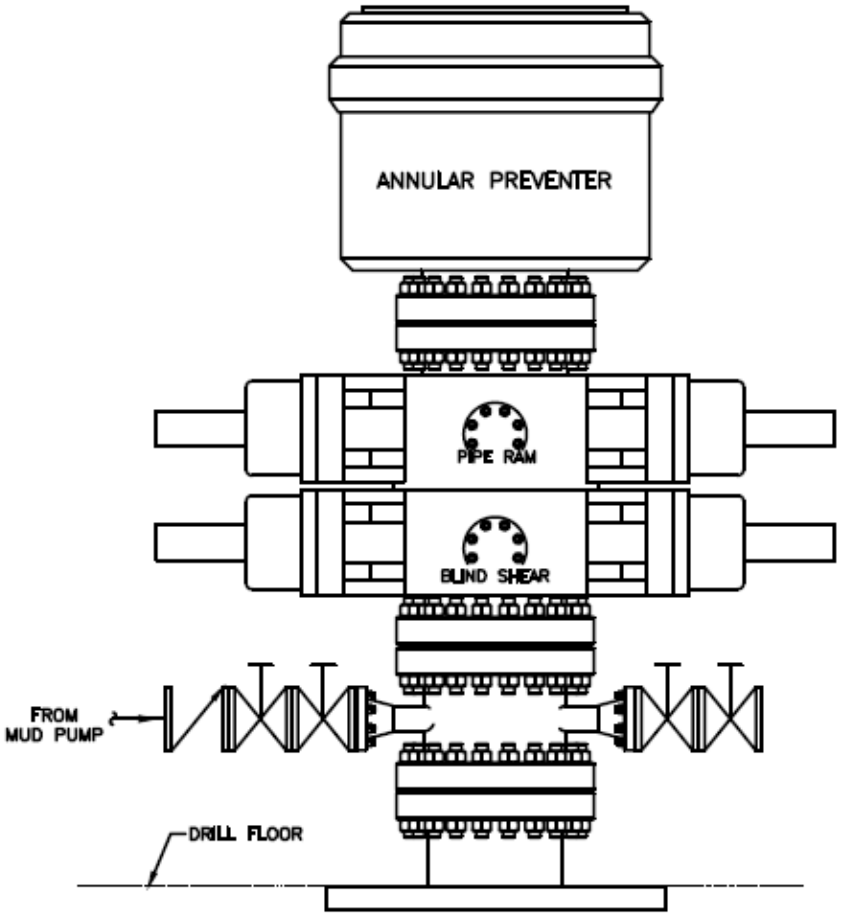

Image 6.2.1 – Typical BOP Stack

In addition to the onshore standards applied by DOGGR, the offshore practices, utilized by the Bureau of Safety and Environmental Enforcement (BSEE) for drilling in the Outer Continental Shelf (OCS), as defined in *30 CFR part 250* will also be followed. There are two main differences between the offshore and onshore BOP standards. First, in offshore standards the BOP has to be certified that the shear rams can actually shear the drill pipe. To do this, a section of drill pipe is placed in the BOP under controlled conditions, the shear ram is then activated, and the drill pipe is sheared. Pressure is then applied to the BOP to ensure that a seal has been created by the closing of the shear rams. The drill pipe is then removed and examined to ensure a clean cut. After the cut, the shear rams undergo a visual and Non-Destructive Test (NDT) to confirm the rams were not damaged by the shear. The second big difference is that the drilling program must be evaluated by a Licensed Professional Engineer to verify that the drilling program is applicable to the BOP selected.

The BOP will also be subjected to additional inspection and testing programs to confirm that all BOP equipment is operating as designed. The programs will incorporate visual inspections, functional operations, pressure tests, maintenance practices, and drills. All program results will be documented and compared to design conditions.

6.3 Drilling Safety Systems

During the drilling and testing phases there will be multiple local and remote safety systems in place. As previously discussed, there will be a BOP designated control system in place. Various alarm systems tied to drilling operations will be installed. Alarms will be tied to the circulation system and operators will be notified by the loss or gain of circulation fluids. All safety controls will be tested on a regular basis and the frequency will depend on the criticality of the system. A full review of the safety control systems will be conducted during the hazard analysis of these phases. The analysis will determine what shutdowns will be associated with each event.

One of the hazards associated with drilling a well is the potential presence of Hydrogen Sulfide (H_2S). The applicable safety standard dealing with H_2S is, *API 49: Recommended Practice for Drilling and Well Servicing Operations Involving Hydrogen Sulfide.*

Fixed H_2S detection systems will be installed and continuous monitoring will be present during all drilling, workover, and well servicing operations. Sensors will be located in areas where personnel frequent, select drilling area locations, areas where H_2S may accumulate, and any other areas determined by hazard analysis to be of risk. Personnel will also carry personal H_2S monitors attached to their clothing for immediate H_2S detection. All monitoring equipment will be routinely inspected and calibrated. Detection levels will be determined and audible as well

as visual alarms will be triggered. Depending on the concentration, these alarms would also be linked to shutdowns and possible evacuations.

In the event of an H_2S excursion there will be contingency plans and emergency procedures in place. Part of the Emergency Action Plan (EAP) will be an "Immediate Action Plan" and it includes concise instructions to be immediately followed by personnel once an H_2S alarm has been triggered. The EAP will include required notification lists. Among the notifications will be emergency services, government agencies, operators, contractors, as well as the public. These notifications can be automatically triggered if the concentration is above a specified concentration.

7.0 Summary

The design philosophy is to build a safe production facility with environmental protection in mind. To accomplish this goal the Best Available Control Technology (BACT) as well as the Best Available and Safest Technology (BAST) will be implemented. The facility will be primarily controlled through an automated process utilizing the latest in PLC technology. The specialized and highly trained operators will oversee the operations and respond to all process deviations. All critical systems will have redundant safety devices. The determination and location for all safety devices will be determined by skilled operators, engineers, and technical advisors through a hazard analysis program.

The guiding design principals will be to utilize the most comprehensive standards available. Currently the most comprehensive standards are typically associated with offshore oil and gas production facilities. Even though this facility will be onshore, the offshore standards will be frequently referenced in order to maintain the guiding design principals. The designs will be based on published documentation from heavily reviewed industry standards. The standards and guidelines utilized will be from the *American Petroleum Institute* (*API*), *American Society of Mechanical Engineers* (*ASME*), *California Code of Regulations* (*CCR*), *Code of Federal Regulations* (*CFR*), the *Division of Oil, Gas, and Geothermal Resources* (*DOGGR*), and *National Fire Protection Association (NFPA)*.

Limiting the environmental impact of the facility will be a major theme throughout all phases. Every phase of the project will focus on preventing unplanned events. Through redundant systems and intelligent designs, this will be a model facility. Primary and secondary safety devices will be in place on critical equipment to prevent incidents from occurring. Even with the safety devices installed, there will still be contingency plans in place to ensure incidents are avoided. Every incident can be avoided if the equipment is properly designed and maintained.

The safety of the employees and public will always be the primary consideration. Every operator will be properly trained on the hazards and how to react to them. In the worst case scenario every operator has the option to activate the ESD and shut down all production. Evacuation and contingency plans will be documented in the Emergency Action Plan (EAP).

By using the latest equipment, incorporating offshore standards whenever applicable, hiring highly trained operators, incorporating redundant safety systems, and integrating advanced control networks, the design principals will be accomplished and the safety and environmental goals will be achieved.

Appendix

A.1 References and Standards

In drilling and production phases of this project the design, installation, and operation of all equipment will be accomplished through implementing all required onshore standards, and where applicable and appropriate, utilize more stringent standards to improve the safety of the project. When multiple standards exist, the more comprehensive option will be selected as the design standard. The following table is a synopsis of phase 2 and 4 along with standards and regulations that will be followed.

Phase	Activity	Standard / Regulation	Description
Phase 2	**Drilling and testing**		
	Hazard Analysis	*API 14C*	*Recommended Practice for Analysis, Design, Installation, and Testing of Basic Surface Safety Systems for Offshore Production Platforms*
		API 14G	*Recommended Practice for Fire Prevention and Control on Fixed Open-Type Offshore Production Platforms.*
		API RP 2001	*Fire Protection in Refineries*
		API 14J	*Design and Hazards Analysis for Offshore Production Facilities*
		API 51R	*Environmental Protection for Onshore Oil and Gas Production Operations and Leases*
		API RP 74	*Recommended Practice for Occupational Safety for Onshore Oil and Gas Production Operation*
		NFPA 30	*Flammable and Combustible Liquids Code*
	Operator Training	*API T2*	*Qualification Programs for Offshore Production Personnel who work with anti-pollution safety Devices*
		API T3	*Recommended Practice for Training and Qualification of Personnel in Well Control Equipment and Techniques for Drilling on Offshore Locations*
		API T6	*Training and Qualification of Personnel in Well Control Equipment and Techniques for Completion and Workover Operations on Offshore Locations*

	Drilling one water injection well	*API Spec 4F*	*Specifications for Drilling and Well Servicing Structures*
		API RP 54	*Recommended Practice for Occupational Safety for Oil and Gas Well Drilling and Servicing Operations*
		API 65	*Isolating Potential Flow zones During Well Construction*
		API RP 53	*Recommended Practice for Blowout Prevention Equipment Systems for Drilling Operations*
		API RP 54	*Recommended Practice for Occupational Safety for Oil and Gas Well Drilling and Servicing Operations*
		API 57	*Offshore Well Completion, Servicing, Workover and Plug and Abandonment Operations*
	Drilling three test oil wells	*API Spec 4F*	*Specifications for Drilling and Well Servicing Structures*
		API RP 53	*Recommended Practice for Blowout Prevention Equipment Systems for Drilling Operations*
		API 57	*Offshore Well Completion, Servicing, Workover and Plug and Abandonment Operations*
		API 65	*Isolating Potential Flow zones During Well Construction*
	Produced water injection	*API 57*	*Offshore Well Completion, Servicing, Workover and Plug and Abandonment Operations*
	Installation of safety equipment	*API 14B*	*Recommended Practice for Design, Installation, Repair and Operation of Subsurface Safety Valve Systems*
		API 14C	*Recommended Practice for Analysis, Design, Installation, and Testing of Basic Surface Safety Systems for Offshore Production Platforms*
		API 14D	*Specification for Wellhead Surface Safety Valves and Underwater Safety Valves*
		API 14E	*Recommended Practice for Design and Installation of Offshore Production Platform Piping Systems*
		API 14F	*Design, Installation, and Maintenance of Electrical Systems for Fixed and Floating Offshore Petroleum Facilities for Unclassified and Class1, Division 1 and Division 2 Locations*
		API 14H	*Installation, Maintenance and Repair of Surface safety valves and underwater valves*
		API RP 74	*Recommended Practice for Occupational Safety for Onshore Oil and Gas Production Operation*
	Possible well abandonment	*ASME 31.3*	*Process piping guide*
		API 57	*Offshore Well Completion, Servicing, Workover and Plug and Abandonment Operations*
		API 49	*Recommended Practice for Drilling and Well Servicing Operations Involving Hydrogen Sulfide*

Phase 4	Development and Operations		
	Final Engineering Design	*API 2G*	*Production Facilities on Offshore Structures*
		API 14C	*Specifications for Drilling and Well Servicing Structures*
		API 14D	*Specification for Wellhead Surface Safety Valves and Underwater Safety Valves*
		API 51R	*Environmental Protection for Onshore Oil and Gas Production Operations and Leases*
		CCR Title 14	*Implementation of the California Environmental Quality Act*
		30 CFR 250	*Oil and Gas and Sulphur Operations*
		NFPA 30	*Flammable and Combustible Liquids Code*
	Produced water injection	*DOGGER UIC*	*Underground Injection Control Requirements*
	Installation of Permanent oil and Gas Production Equipment.	*API 14F*	*Design, Installation, and Maintenance of Electrical Systems for Fixed and Floating Offshore Petroleum Facilities for Unclassified and Class1, Division 1 and Division 2 Locations*
	Installation of permanent site utilities	*API 14H*	*Installation, Maintenance and Repair of Surface safety valves and underwater valves*
		API RP 74	*Recommended Practice for Occupational Safety for Onshore Oil and Gas Production Operation*
		ASME 31.3	*Process piping guide*
		ASME Section VIII – Division 1	*Boiler and Pressure Vessel Inspection Code*
		API 620	*Design and Construction of Large, Welded, Low-Pressure Storage tanks*
	Construction of off-site pipelines	*API 14E*	*Recommended Practice for Design and Installation of Offshore Production Platform Piping Systems*
		ASME 31.4	*Pipeline Transportation Systems for Liquid Hydrocarbons and Other Liquid*
	Startup operation of facility	*API 57*	*Offshore Well Completion, Servicing, Workover and Plug and Abandonment Operations*

	Drill remaining oil wells	*API Spec 4F*	*Specifications for Drilling and Well Servicing Structures*
		API RP 53	*Recommended Practice for Blowout Prevention Equipment Systems for Drilling Operations*
		API RP 54	*Recommended Practice for Occupational Safety for Oil and Gas Well Drilling and Servicing Operations*
		API 57	*Offshore Well Completion, Servicing, Workover and Plug and Abandonment Operations*
		API 65	*Isolating Potential Flow zones During Well Construction*
	Drill remaining injection wells	*API RP 53*	*Recommended Practice for Blowout Prevention Equipment Systems for Drilling Operations*
		API RP 54	*Recommended Practice for Occupational Safety for Oil and Gas Well Drilling and Servicing Operations*
		API 57	*Offshore Well Completion, Servicing, Workover and Plug and Abandonment Operations*
		API 65	*Isolating Potential Flow zones During Well Construction*
		DOGGER UIC	*Underground Injection Control Requirements*
	Ongoing maintenance	*API 14H*	*Installation, Maintenance and Repair of Surface safety valves and underwater valves*
		API RP 74	*Recommended Practice for Occupational Safety for Onshore Oil and Gas Production Operation*
		API 510	*Pressure Vessel Inspection Code – Maintenance inspection, rating, repair, and alteration*
		API 653	*Pressure Vessel Inspection Code – Maintenance inspection, rating, repair, and alteration*
		API 570	*Inspection, Repair, Alteration and Rerating of In-Services Piping Systems*

Table A.1.1 – Applicable Safety Standards

A.2 Detailed Examples of Safety Devices

Heater Treater

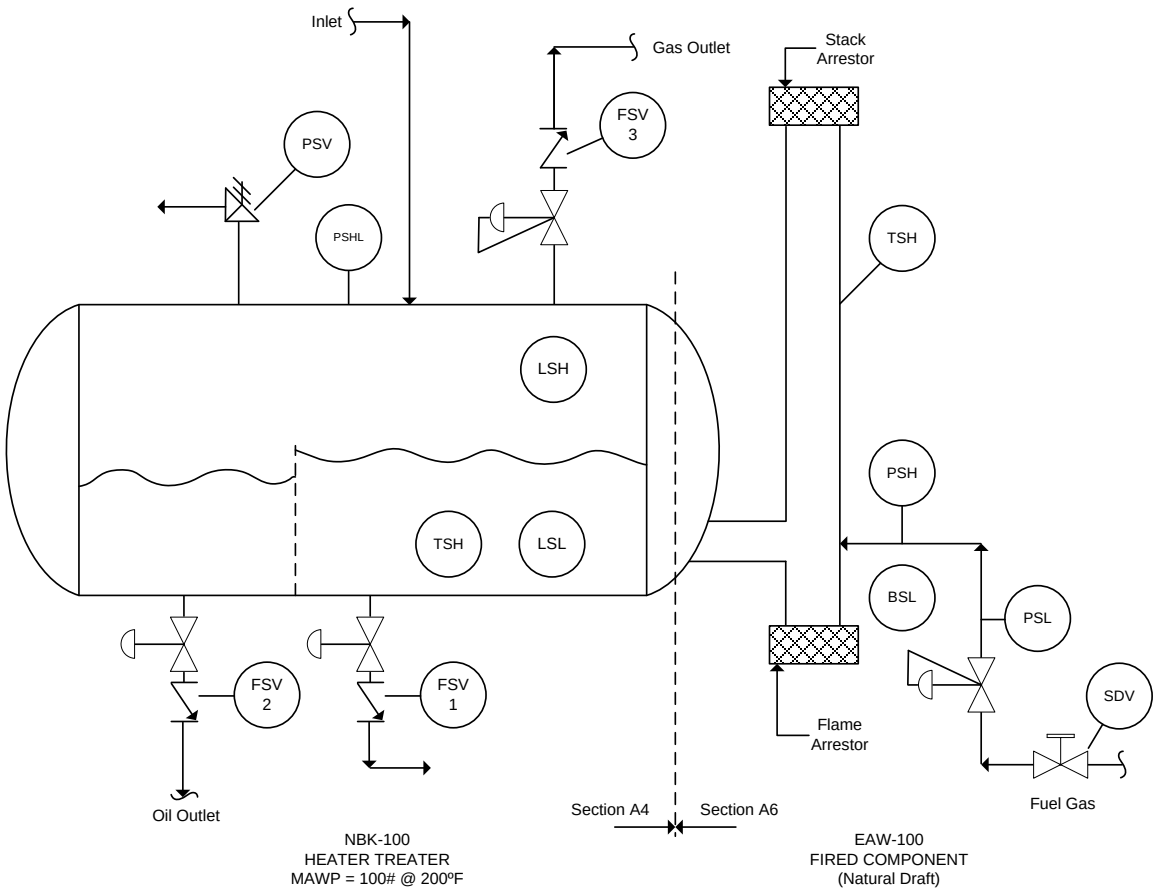

KEY:

BSL	Burner Safety Low	PSHL	Pressure Safety High Low
SFV	Flow Safety Valve	PSL	Pressure Safety Low
LSH	Level Safety High	PSV	Pressure Safety Valve
LSL	Level Safety Low	SDV	Shut Down Valve
PSH	Pressure Safety High	TSH	Temperature Safety High

Image A.2.1 – Heater Treater, courtesy of *API*

Pneumatic Actuator / Safety Valve

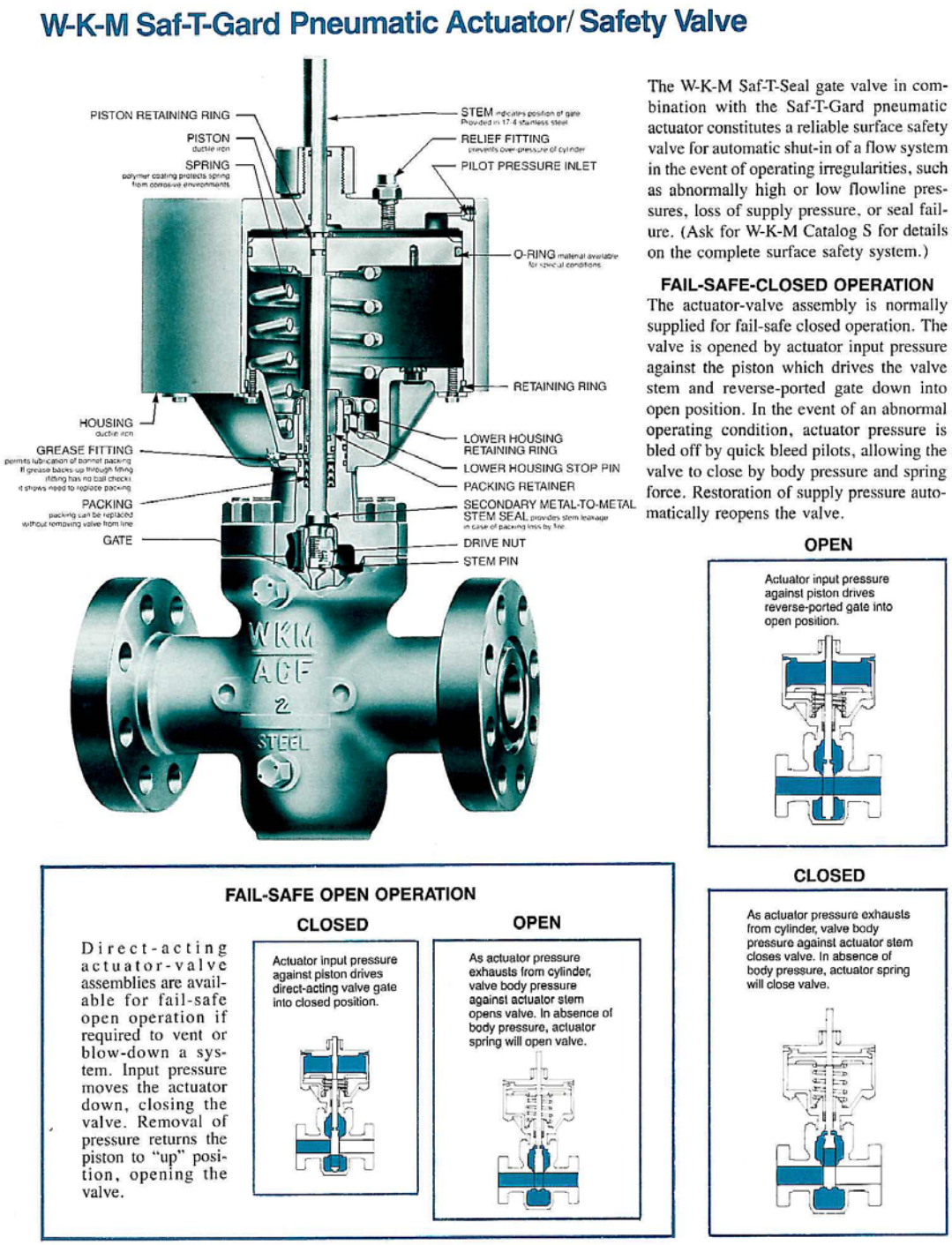

Image A2.2 – Surface Safety Valve, courtesy of W-K-M

A.3 Glossary of Acronyms

API	American Petroleum Institute
ASME	American Society of Mechanical Engineers
BACT	Best Available Control Technology
BAST	Best Available and Safest Technology
BOP	Blowout Preventer
BSEE	Bureau of Safety and Environmental Enforcement
CCR	California Code of Regulations
CFR	Code of Federal Regulations
DOGGR	Division of Oil, Gas, and Geothermal Resources
EAP	Emergency Action Plan
ESD	Emergency Shut Down
H_2S	Hydrogen Sulfide
HAZOP	Hazard and Operability Study
HSE	Health Safety and Environmental
LORS	Laws, Ordinances, Regulations, and Standards
NDT	Non-Destructive Testing
NFPA	National Fire Protection Agency
OCS	Outer Continental Shelf
OP	Output
P&ID	Piping and Instrumentation Diagram
PLC	Programmable Logic Controller
PV	Process Variable
SAFE	Safety Analysis Function Evaluation
SDV	Shut Down Valve
SSV	Surface Safety Valve
SCSSV	Surface Controlled Sub-Surface Safety Valve
SP	Set Point
VRU	Vapor Recovery Unit
WCS	Wireless Control System